DECK
PERMIT REQUIREMENTS
LA CRESCENT, MINNESOTA

The following information must be submitted to the building department before a deck permit can be processed and approved, more detailed information is listed below

After a preliminary review, additional information may be required.

Complete the online application, include the General Contractors License Number, [owners doing work on their own properties are not required to be licensed, but must sign property owner waiver]. A site plan, drawing of proposed deck with structural details for the proposed deck are required at the time of the permit application. You can attach your drawings to your online application.

General Information

When is a Deck Permit Required? A building permit is required for all decks that are either:

- When a deck or platform is part of an accessible route (Accessible route refers to the designated main entry of the dwelling as required by code).
- attached to a structure with frost footings
- more than 30" above grade.

Required Inspection:

- A footing inspection is required when the holes have been dug (Minimum 42" deep) but before the concrete is poured. **Cement "cookies" are not allowed**.
- The final inspection to check the framing, guards, stairways and handrails.

If the deck is being completed on a weekend the inspection should be scheduled for the following Monday.

Fees: Are determined by the value of the proposed deck, including all labor and materials, (even if the homeowner will be doing the work.

Questions: If you have any questions, please contact the **Building Department**, Monday through Thursday, 7:30 a.m. to 6:00 p.m. at **507-895-4409**, or write to, **swetterlin@cityoflacrescent-mn.gov, Shawn Wetterlin-Building Official, 315 Main Street, City of La Crescent, Minnesota, 55947.**

RESIDENTIAL DECKS AND THE 2020 MINNESOTA RESIDENTIAL CODE

Minnesota Department of Labor and Industry

General requirements and building permits

Effective March 31, 2020, residential exterior decks must be designed and constructed using the 2020 Minnesota Residential Code (MRC), related standards, manufacturer installation instructions, best practices and local jurisdiction zoning codes and ordinances.

Building permits are required:

- When a deck or a platform is more than 30 inches above adjacent grade.
- When a deck or platform is attached to a structure with frost footings.
- When a deck or platform is part of an accessible route (Accessible route refers to the designated main entry of the dwelling as required by code).

Deck materials

All wood used in deck construction must meet requirements of MRC R507.2.1. This includes the grade of the wood (No. 2 or better), preservative treated or naturally durable lumber that has approval by the local jurisdiction. Preservative-treated wood must be appropriate for the installation and meet the American Wood Protection Association's (AWPA) UC3 (above ground) or UC4 (ground contact) use categories. All cuts, notches and holes in preservative-treated wood requires field treatment (MRC R317.1.1). All engineered wood products must meet the requirements in MRC R502.

Exterior deck boards, stair treads, guards or handrails made of plastic composite materials must meet certain performance standards in American Society for Testing and Materials (ASTM) D7302. Labels on materials or packaging will indicate compliance. Follow manufacturer's installation instructions for plastic composite materials.

Fasteners and connectors

Requirements for fasteners are in MRC Table R507.2.3 and R317.3. Fasteners (including nuts and washers) used in preservative-treated wood must be hot-dipped, zinc-coated galvanized steel, stainless steel, silicon bronze or copper. Staples used in preservative-treated wood must be stainless steel. Metal connectors in contact with preservative-treated wood should follow manufacturers recommendations and MRC Table R507.2.3.

Holes for bolts must be drilled between 1/32 and 1/16 of an inch larger than the bolt. Lag screws 1/2 inch or larger should be predrilled to avoid wood splitting.

Footings

Decks are required to be supported on concrete footings or other approved structural systems designed to accommodate all loads in accordance with the MRC. The use of alternative footings must be reviewed for approval by the local building safety department. Footings must be sized to bear loads and suitable for allowable soil-bearing

pressure (MRC Table R401.4.1). The minimum depths of footings must be either 5'-0" (Zone 1) or 3'-6" (Zone 2). Refer to Minnesota Rules 1303.1600 for the counties included in each zone.

Deck posts

Deck post sizing requirements are in MRC Table R507.4 and are limited to single-level wood-framed decks when sizing the decks other structural components with MRC Table R507.5. The height of the post shown in MRC Table R507.4 is measured from the underside of the beam to the top of the footing. Deck posts are based on using a 40 psf live load for structural member size calculations. Metal connectors must be provided at the top and bottom of posts for lateral restraint.

Beams

Allowable deck beam span lengths can be determined in MRC Table R507.5. Examples of the flush beams and dropped beams can be seen in the examples shown. Measurements of deck beam lengths need to be from center of post to center of post. The spans used in the table are based on a live load of 40 psf, a dead load of 10 psf, supporting deck joists from one side only and the beam depth must be greater than or equal to the joist depth when using a flush beam configuration. Beam plies shall be fastened with two rows of 10d (3-inch x 0.128-inch) nails or approved fasteners a minimum of 16 inches on center. Beams are allowed to cantilever up to one-fourth of their allowable span at each end.

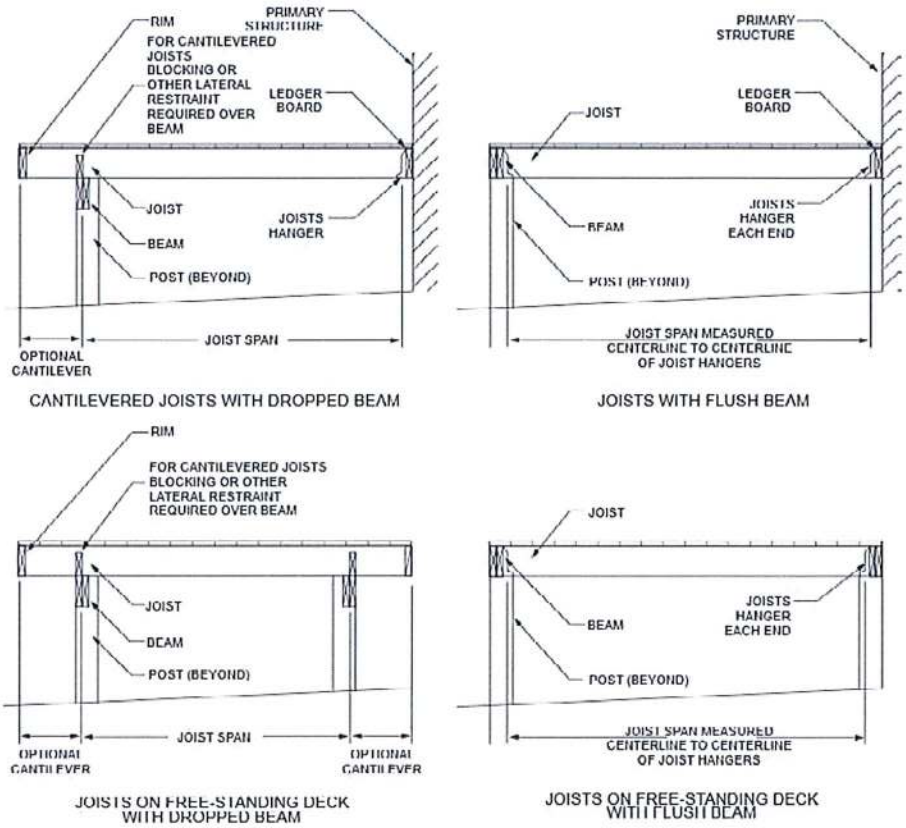

Ends of beams used in splices must have a minimum of 1-1/2 inches of bearing on wood and 3 inches on concrete. Multiple-span beams must have full bearing on posts (MRC Figures R507.5.1(1) and R507.5.1(2)). Those figures also show beam-to-post connections with metal connector plates and bolts and nuts configurations that are required by MRC R507.5.2.

Joists

Allowable spans for joists are in MRC Table 507.6. The live load used in the table is 40 psf and a dead load of 10 psf. The maximum cantilever length is determined by the lesser of one-fourth of the joist span or the maximum cantilever length shown in MRC Table 507.6. Joist spacing is limited by the span rating of the decking being used, see MRC Table R507.7.

Deck joists require a minimum of 1-1/2 inches of bearing on wood and 3 inches on concrete. Joist bearing on top of a single-ply beam or ledger shall be attached by a mechanical connector. Use the fastener schedule (MRC Table R602.3(1)) for fastening joists to a multiple-ply beam. Use an approved joist hanger for joist framing into the side of a beam or ledger board.

Where joist hangers or blocking are used, 60-percent of the joist depth must be restrained. If a rim joist is being used, not fewer than three 10d (3-inch x 0.128-inch) nails or three No. 10x 3-inch-long wood screws are required.

Decking

Use at least two 8d threaded nails or two No. 8 wood screws to attach wood decking to the joist. Other approved decking or fastener systems shall be installed in accordance with the manufacturer's installation requirements.

Ledger and band joist

A ledger board attached to the exterior wall of the primary structure must be at least 2-inch by 8-inch nominal. Pressure-preservative-treated Southern pine, incised pressure-preservative treated hem-fir, or approved, naturally durable, No. 2 grade or better lumber. Deck ledgers must not support concentrated loads from beams or girders and cannot be supported on stone or masonry veneer.

Band joists supporting a ledger must bear fully on the primary structure and be capable of supporting all required loads. Fasteners used in deck ledger connections in accordance with MRC Tables R507.9.1.3(1) shall be hot-dipped galvanized or stainless steel and shall be installed in accordance with Table R507.9.1.3(2) and figures R507.9.1.3(1) and R507.9.1.3(2). Where connections to the primary structure cannot be verified during inspection, decks must be self-supporting.

Lateral support

Lateral-load connection devices must be installed to transmit the lateral loads imposed on the deck to the ground. The lateral-load connection device shown in MRC Figure R507.9.2(1), with the threaded rod and connection points on the deck joist and the primary structure floor system, must be installed in two locations on the deck a minimum of 24 inches from the ends. Each device must have an allowable stress design capacity of at least 1,500 pounds.

Where the lateral load connections are provided in accordance with Figure R507.9.2(2), the hold-down tension devices must be installed in at least four locations per deck, and each device must have an allowable stress design capacity of at least 750 pounds. Hold-down tension devices are required to be installed per the manufacturer's instructions.

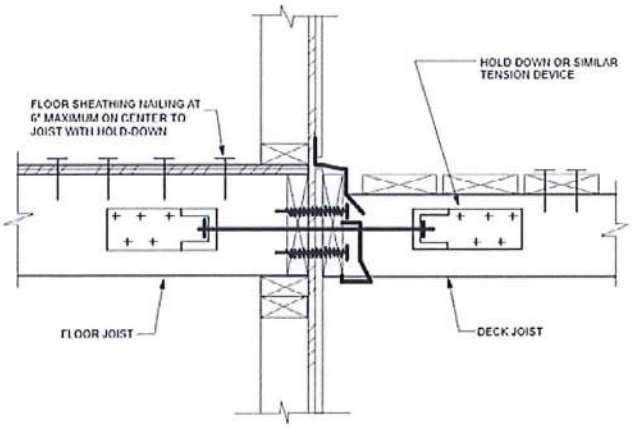

FIGURE R507.9.2(1)
DECK ATTACHMENT FOR LATERAL LOADS

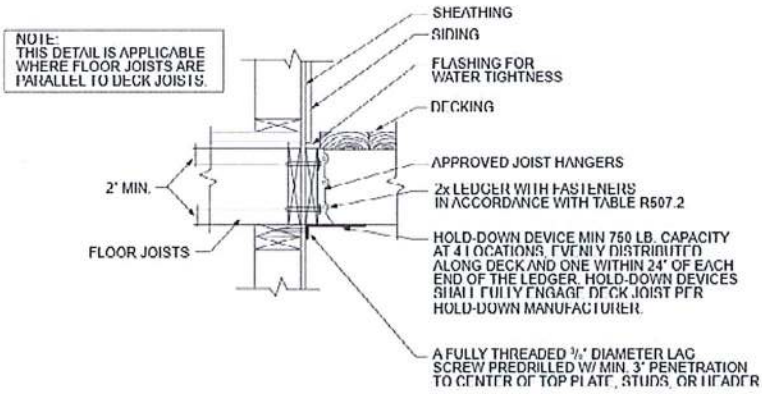

FIGURE R507.9.2(2)
DECK ATTACHMENT FOR LATERAL LOADS

TERMINOLOGY

1. RAIL TOP CAP
2. BALLUSTERS
3. RAIL POST
4. SUPPORT POST
5. RIM OR BAND JOIST
6. DECKING
7. JOISTS
8. POST BASE CONNECTOR
9. PIER
10. FOOTING
11. DROP BEAM
12. BLOCKING
13. HOUSE JOIST
14. ½" BOLTS
15. LEDGER BOARD
16. FLASHING

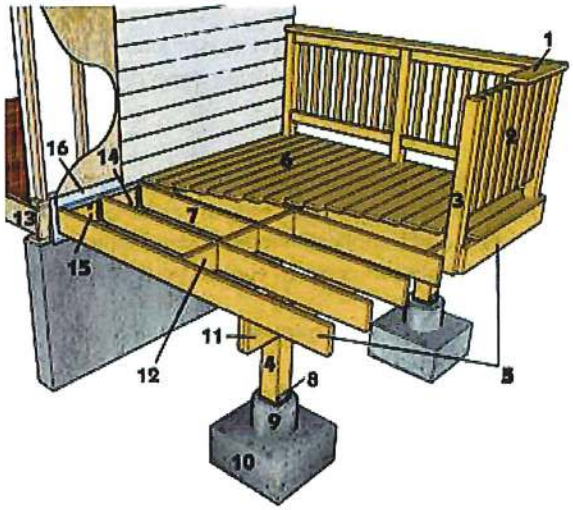

THINKYOU MIGHT ENCLOSE YOUR DECKIN THEFUTURE?

Deck plans are approved on the assumption that the deck will be used only as a deck for the life of the structure. Because footing sizes, setbacks, structural supports, and a host of other deck components are different for enclosed spaces than they are for decks, it is important that you indicate on you plans the desire to convert the deck at a future date. You should then design your deck to carry future loads and meet setbacks and other rules.

ZONING REGULATIONS

Decks are permitted as an addition to a dwelling in a side or rear yard or as a freestanding structure. An accurate site plan/survey showing the deck location must be submitted with the construction plans for review. Setbacks are routinely checked as a part of the plan review and again at the time of the footing inspection. Unless otherwise permitted by the Building department, lot lines must be marked and survey markers exposed. A site inspection may be required to verify actual deck/stair locations.

Easements, wetland buffer sand other lot restrictions may require greater setbacks than should be directed to the Planning and Zoning Office at

Clearances:

Well:	3 feet to footing or deck overhang
Septic Tank:	10 feet
Drainfield:	20 feet
Overhead Electrical:	10 feet including drip leg
ExistingIntakes/Exhausts:	Maintain manufacturers clearances

Call Gopher State One Call for utility locations at least two working days before you dig – 1-800-252-1166 or 651- 454-0002. Or 811

GOPHER STATE ONE CALL

ELECTRICAL

NEC 210.52(E)(3) Balconies, decks and porches, regardless of size, that are accessible from inside a dwelling unit shall have at least one receptacle installed within the perimeter.

R303.7 Exterior stairways shall be provided with a means to illuminate the stairs, including the landings and treads. Exterior stairways shall be provided with an artificial light source located in the immediate vicinity of the top landing of the stairway.

The illumination of exterior stairways shall be controlled from inside the dwelling unit.
Exception: Lights that are continuously illuminated or automatically controlled.

MATERIALS

Fasteners

Nails and other hardware must be hot-dipped zinc-coated (galvanized), stainless steel or equal. Screws should be either hot-dipped galvanized or electroplated with a polymer coating. 12d nails are recommended on nominal 2-inch decking. 10d nails are recommended for 5/4" decking.

With lag screws, use a flat washer under the head. Use washers under the nut and head of machine bolts and just under the nut of carriage bolts.

Lumber

All wood used in deck construction must be pressure treated lumber or wood that is naturally resistant to decay such as redwood orcedar.

Wood used above ground, in contact with the ground, or below ground requires different degrees of treatment. Check the labels of the material you are buying to determine where it can be used. *Because some preservative treatments are very corrosive, make sure that any fasteners or metal connectors used in the construction of your deck are approved by the manufacturer for use with treated wood.*

DECKING

Materials commonly used for decking include standard dimension lumber (either 2X4 or 2X6), radius-edged decking, or a manufactured decking product.

Radius-edged Patio Decking (5/4 decking) has been specifically developed for outdoor decks. *Redwood and cedar patio decking is intended to be used flat-wise in load-bearing applications where spans do not exceed 16" o.c. (12" o.c. when installed diagonally to joists). Southern pine decking may span 24" o.c. or 16" o.c. when installed diagonally to joists.*

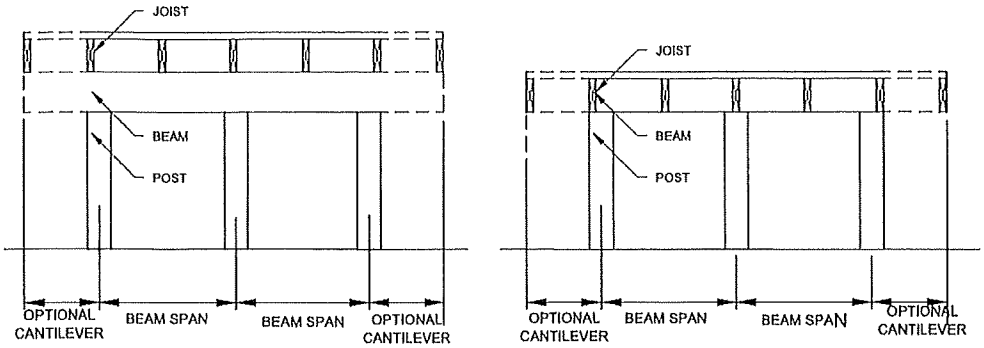

DROPPED BEAM FLUSH BEAM

FIGURE R507.5
TYPICAL DECK JOIST SPANS

TABLE R507.5
DECK BEAM SPAN LENGTHS[a, b, g] (feet - inches)

SPECIES[c]	SIZE[d]	DECK JOIST SPAN LESS THAN OR EQUAL TO: (feet)						
		6	8	10	12	14	16	18
Southern pine	1 – 2 × 6	4-11	4-0	3-7	3-3	3-0	2-10	2-8
	1 – 2 × 8	5-11	5-1	4-7	4-2	2-10	3-7	3-5
	1 – 2 × 10	7-0	6-0	5-5	4-11	4-7	4-3	4-0
	1 – 2 × 12	8-3	7-1	6-4	5-10	5-5	5-0	4-9
	2 – 2 × 6	6-11	5-11	5-4	4-10	4-6	4-3	4-0
	2 – 2 × 8	8-9	7-7	6-9	6-2	5-9	5-4	5-0
	2 – 2 × 10	10-4	9-0	8-0	7-4	6-9	6-4	6-0
	2 – 2 × 12	12-2	10-7	9-5	8-7	8-0	7-6	7-0
	3 – 2 × 6	8-2	7-5	6-8	6-1	5-8	5-3	5-0
	3 – 2 × 8	10-10	9-6	8-6	7-9	7-2	6-8	6-4
	3 – 2 × 10	13-0	11-3	10-0	9-2	8-6	7-11	7-6
	3 – 2 × 12	15-3	13-3	11-10	10-9	10-0	9-4	8-10
Douglas fir-larch[e], hem-fir[e], spruce-pine-fir[e], redwood, western cedars, ponderosa pine[f], red pine[f]	3 × 6 or 2 – 2 x 6	5-5	4-8	4-2	3-10	3-6	3-1	2-9
	3 × 8 or 2 – 2 × 8	6-10	5-11	5-4	4-10	4-6	4-1	3-8
	3 × 10 or 2 – 2 × 10	8-4	7-3	6-6	5-11	5-6	5-1	4-8
	3 × 12 or 2 – 2 × 12	9-8	8-5	7-6	6-10	6-4	5-11	5-7
	4 × 6	6-5	5-6	4-11	4-6	4-2	3-11	3-8
	4 × 8	8-5	7-3	6-6	5-11	5-6	5-2	4-10
	4 × 10	9-11	8-7	7-8	7-0	6-6	6-1	5-8
	4 × 12	11-5	9-11	8-10	8-1	7-6	7-0	6-7
	3 – 2 × 6	7-4	6-8	6-0	5-6	5-1	4-9	4-6
	3 – 2 × 8	9-8	8-6	7-7	6-11	6-5	6-0	5-8
	3 – 2 × 10	12-0	10-5	9-4	8-6	7-10	7-4	6-11
	3 – 2 × 12	13-11	12-1	10-9	9-10	9-1	8-6	8-1

For SI: 1 inch = 25.4 mm, 1 foot = 304.8 mm, 1 pound per square foot = 0.0479 kPa, 1 pound = 0.454 kg.

a. Live load = 40 psf, dead load = 10 psf, L/Δ = 360 at main span, L/Δ = 180 at cantilever with a 220-pound point load applied at the end.

b. Beams supporting deck joists from one side only.

c. No. 2 grade, wet service factor.

d. Beam depth shall be greater than or equal to depth of joists with a flush beam condition.

e. Includes incising factor.

f. Northern species. Incising factor not included.

g. Beam cantilevers are limited to the adjacent beam's span divided by 4.

TABLE R507.6
DECK JOIST SPANS FOR COMMON LUMBER SPECIES (ft. - in.)

SPECIES[a]	SIZE	ALLOWABLE JOIST SPAN[b]			MAXIMUM CANTILEVER[c,f]		
		SPACING OF DECK JOISTS (inches)			SPACING OF DECK JOISTS WITH CANTILEVERS[c] (inches)		
		12	16	24	12	16	24
Southern pine	2 × 6	9-11	9-0	7-7	1-3	1-4	1-6
	2 × 8	13-1	11-10	9-8	2-1	2-3	2-5
	2 × 10	16-2	14-0	11-5	3-4	3-6	2-10
	2 × 12	18-0	16-6	13-6	4-6	4-2	3-4
Douglas fir-larch[d], hem-fir[d] spruce-pine-fir[d],	2 × 6	9-6	8-8	7-2	1-2	1-3	1-5
	2 × 8	12-6	11-1	9-1	1-11	2-1	2-3
	2 × 10	15-8	13-7	11-1	3-1	3-5	2-9
	2 × 12	18-0	15-9	12-10	4-6	3-11	3-3
Redwood, western cedars, ponderosa pine[e], red pine[e]	2 × 6	8-10	8-0	7-0	1-0	1-1	1-2
	2 × 8	11-8	10-7	8-8	1-8	1-10	2-0
	2 × 10	14-11	13-0	10-7	2-8	2-10	2-8
	2 × 12	17-5	15-1	12-4	3-10	3-9	3-1

For SI: 1 inch = 25.4 mm, 1 foot = 304.8 mm, 1 pound per square foot = 0.0479 kPa, 1 pound = 0.454 kg.

a. No. 2 grade with wet service factor.

M b. Live load = 40 psf, dead load = 10 psf, L/Δ = 360.

N c. Live load = 40 psf, dead load = 10 psf, L/Δ = 360 at main span, L/Δ = 180 at cantilever with a 220-pound point load applied to end.

M d. Includes incising factor.

N e. Northern species with no incising factor.

f. Cantilevered spans not exceeding the nominal depth of the joist are permitted.

TABLE R507.7
MAXIMUM JOIST SPACING FOR DECKING

DECKING MATERIAL TYPE AND NOMINAL SIZE	MAXIMUM ON-CENTER JOIST SPACING	
	Decking perpendicular to joist	Decking diagonal to joist[a]
$1^1/_4$-inch-thick wood	16 inches	12 inches
2-inch-thick wood	24 inches	16 inches
Plastic composite	In accordance with Section R507.2	In accordance with Section R507.2

For SI: 1 inch = 25.4 mm, 1 foot = 304.8 mm, 1 degree = 0.01745 rad.

a. Maximum angle of 45 degrees from perpendicular for wood deck boards.

Manufactured decking products maybe used only when meeting ASTM D 7032 or when approved by the Building Department. Approval is based on the material carrying an ICC Evaluation Services Report. Decking without a report may not be approved. Ask the decking supplier to provide you with a copy of the research report. The Building Department maintains a list of composite decking materials that meet US building codes that is available upon request. ***Caution – some manufactured deck products are approved for decking but not for stair treads. In some cases where manufactured decking is approved for stairs, the spacing of supports may be significantly reduced compared to use on the deck itself. Read the research report for further information.***

MAXIMUM DECK BOARD SPANS	
2x6 OR 5/4 SOUTHERN PINE PERPENDICULAR TO JOIST	24" O.C.
5/4 CEDAR OR REDWOOD AND 2X4 PERPENDICULAR TO JOIST OR 5/4 SOUTHERN PINE OR 2X6 AT 45 DEGREES TO JOIST	16" O.C.
5/4 AND 2X4 AT 45 DEGREES TO JOIST	12" O.C.

FOOTINGS

Footings supporting a 4x4 column must be not less than 6-inch diameter. Post footings supporting columns larger than 4x4 must be 8-inch diameter or larger. The bottom of post footings may be "belled" to achieve the desired minimum bearing area. The base of the footing must be at least **42 inches** below finished grade. Rebar is recommended. Center the column on the footing secured by a pin or connector. Posts imbedded in the ground must be 60% C.C.A. or equal. Using a fiberboard tube will allow elevation of the top of the footing above finished grade to provide protection of the wood post from lawn mowers and trimmers.

UNDERSTANDING LOAD PATHS

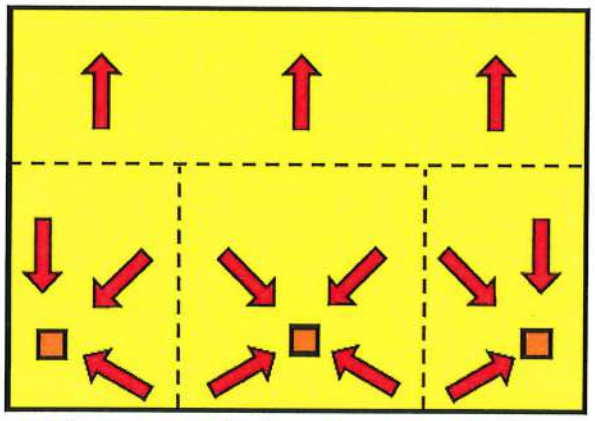

Loads are assumed to be uniform across the floor

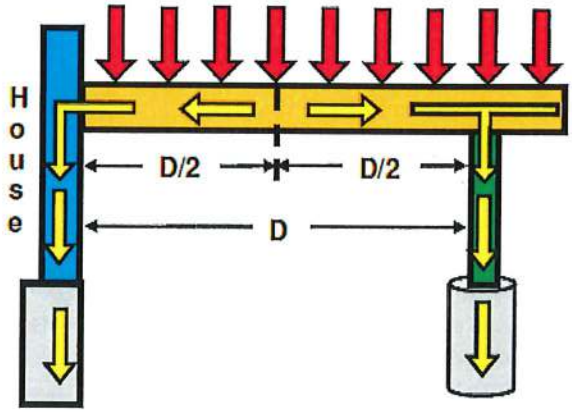

Deck footings should be sized according to the following table. Footings must extend ***at least 42 inches below grade*** (frost line) except for decks that are not connected to a dwelling. ***The minimum compressive strength of concrete used for deck footings is <u>2500 psi</u>.***

TABLE R507.3.1
MINIMUM FOOTING SIZE FOR DECKS

LIVE LOAD[b] (psf)	TRIBUTARY AREA (sq. ft.)	LOAD BEARING VALUE OF SOILS [a, c, d] (psf)											
		1500[e]			2000[e]			2500[e]			≥ 3000[e]		
		Side of a square footing (inches)	Diameter of a round footing (inches)	Thickness (inches)	Side of a square footing (inches)	Diameter of a round footing (inches)	Thickness (inches)	Side of a square footing (inches)	Diameter of a round footing (inches)	Thickness (inches)	Side of a square footing (inches)	Diameter of a round footing (inches)	Thickness (inches)
40	20	12	14	6	12	14	6	12	14	6	12	14	6
	40	14	16	6	12	14	6	12	14	6	12	14	6
	60	17	19	6	15	17	6	13	15	6	12	14	6
	80	20	22	7	17	19	6	15	17	6	14	16	6
	100	22	25	8	19	21	6	17	19	6	15	17	6
	120	24	27	9	21	23	7	19	21	6	17	19	6
	140	26	29	10	22	25	8	20	23	7	18	21	6
	160	28	31	11	24	27	9	21	24	8	20	22	7

For SI: 1 inch = 25.4 mm, 1 square foot = 0.0929 m^2, 1 pound per square foot = 0.0479 kPa.

a. Interpolation permitted, extrapolation not permitted.

b. Live load = 40 psf, dead load = 10 psf.

c. Assumes minimum square footing to be 12 inches x 12 inches x 6 inches for 6 x 6 post.

d. If the support is a brick or CMU pier, the footing shall have a minimum 2-inch projection on all sides.

e. Area, in square feet, of deck surface supported by post and footings.

Required footing sizes are determined by calculating the area of the deck supported by each footing. Loads shall be assumed to be equally shared between the supporting elements. ***Don t over look cantilevers. The minimum compressive strength of concrete used for deck footings is <u>2500 psi</u>.***

<u>THE REQUIRED AREA OF THE COLLUMN SHOULD FULLY BEAR ON THE FOOTING</u>

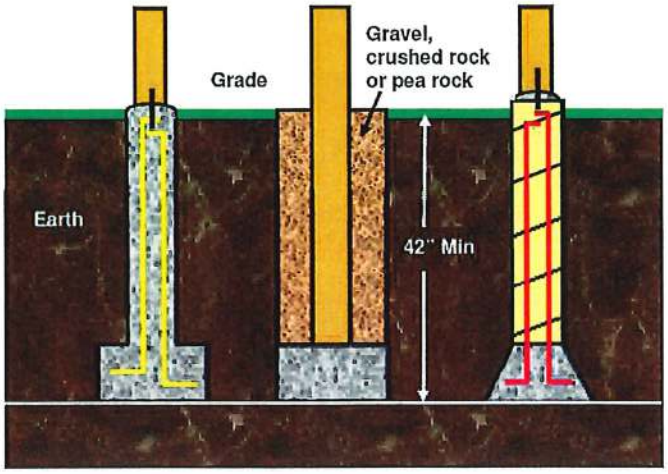

The minimum compressive strength of concrete used for deck footings is <u>2500 psi</u>.

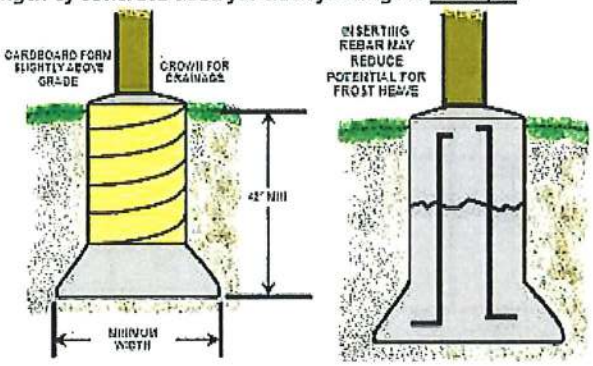

WHERE DO I PUT MY FOOTINGS?

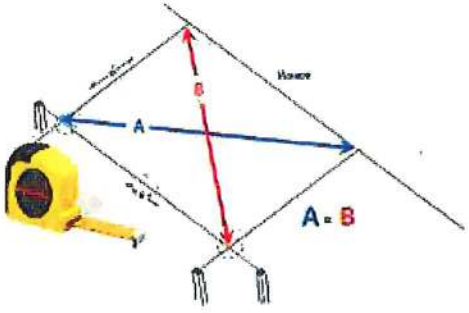

STRING LINES TO SQUARE DECK

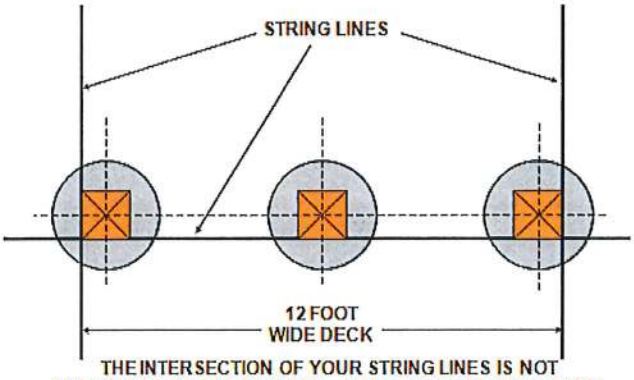

THE INTERSECTION OF YOUR STRING LINES IS NOT THE CENTER OF THE FOOTING. ADJUST ACCORDING TO THE LOCATION AND SIZE OF YOUR COLUMN.

ANCHORING POST BASE

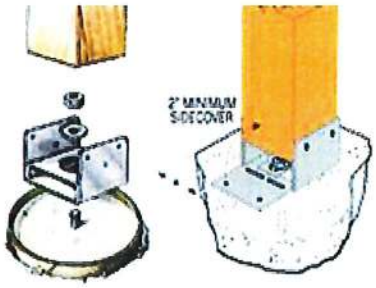

Follow manufacturers installation specifications.

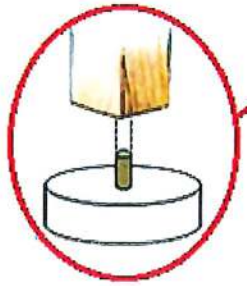

Not allowed - connection must be made using a field inspectable means of connection.

DECKFRAMINGATTACHMENT OF LEDGER BOARD TO *WOOD JOISTS (2X6, 2X8, 2X10, 2X12)*

(Caution: 2x6 and 2x8 joists will require underside floor protection with 5/8" treated plywood)

Make sure the ledger is securely attached to the dwelling. Install metal flashing at top and caulk sides.

TABLE R507.2
FASTENER SPACING FOR A SOUTHERN PINE OR HEM-FIR DECK LEDGER AND A 2-INCH-NOMINAL SOLID-SAWN SPRUCE-PINE-FIR BAND JOIST[c, f, and g]
(Deck live load = 40 psf, deck dead load = 10 psf)

JOIST SPAN	6' and less	6'1" to 8'	8'1" to 10'	10'1" to 12'	12'1" to 14'	14'1" to 16'	16'1" to 18'
Connection details	On-center spacing of fasteners d and e[e]						
½ inch diameter lag screw with /32 inch maximum sheathing[a]	30	23	18	15	13	11	10
½ inch diameter bolt with /32 inch maximum sheathing	36	36	34	29	24	21	19
½ inch diameter bolt with /32 inch maximum sheathing and ½ inch stacked washers[b, h]	36	36	29	24	21	18	16

a. The tip of the lag screw shall fully extend beyond the inside face of the band joist.
b. The maximum gap between the face of the ledger board and face of the wall sheathing shall be ½inch.
c. Ledgers shall be flashed to prevent water from contacting the house band joist.
d. Lag screws and bolts shall be staggered in accordance with Section R507.2.1.
e. Deck ledger shall be minimum 2 × 8 pressure-preservative-treated No. 2 grade lumber, or other approved materials as established by standard engineeringpractice.
f. When solid-sawn pressure-preservative-treated deck ledgers are attached to a minimum 1-inch-thick engineered wood product (structural composite lumber, laminated veneer lumber or wood structural panel band joist), the ledger attachmentshall be designed in accordance with accepted engineering practice.
g. A minimum 1 × 9½Douglas Fir laminated veneer lumber rimboard shall be permitted in lieu of the 2-inch nominal band joist.
h. Wood structural panel sheathing, gypsum board sheathing or foam sheathing not exceeding 1 inch in thickness shall be permitted. The maximum distance between the face of the ledger board and the face of the band joist shall be 1 inch.

Capacity of lag or carriage bolts shall not exceed 400 lb's per bolt unless design provided.

TABLE 507.2.1
PLACEMENT OF LAG SCREWS AND BOLTS IN DECK LEDGERS AND BAND JOISTS

MINIMUM END AND EDGE DISTANCES AND SPACING BETWEEN ROWS				
	TOP EDGE	BOTTOM EDGE	ENDS	ROW SPACING
Ledg[a]	2 inches	¼ inch	2 inch[b]	1 ⅝ inches
Band Joist	¾ inches	2 inches	2 inch[b]	1 ⅝ inches

a. Lag screws or bolts shall be staggered from the top to the bottom along the horizontal run of the deck ledger in accordance with Figure R507.2.1(1).
b. Maximum 5 inches.
c. For engineered rim joists, the manufacturer's recommendations shall govern.
d. The minimum distance from bottom row of lag screws or bolts to the top edge of the ledger shall be in accordance with Figure R507.2.1(1).

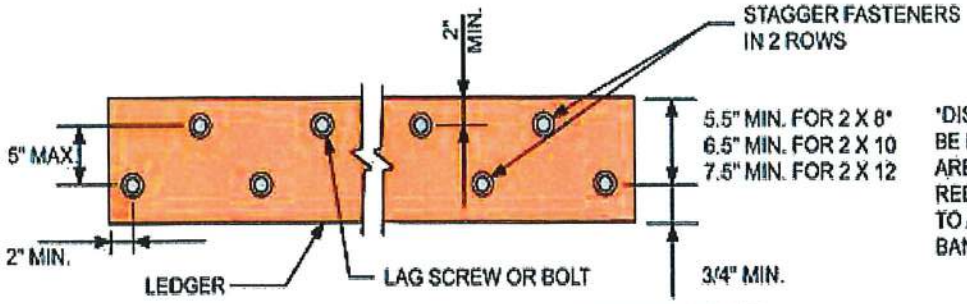

*DISTANCE SHALL BE PERMITTED TO BE REDUCED TO 4.5" IF LAG SCREWS ARE USED OR BOLT SPACING IS REDUCED TO THAT OF LAG SCREWS TO ATTACH 2 X 8 LEDGERS TO 2 X 8 BAND JOISTS.

FIGURE R507.2.1(1)
PLACEMENT OF LAG SCREWS AND BOLTS IN LEDGERS

PLACEMENT OF LAG SCREWS AND BOLTS IN BAND JOISTS

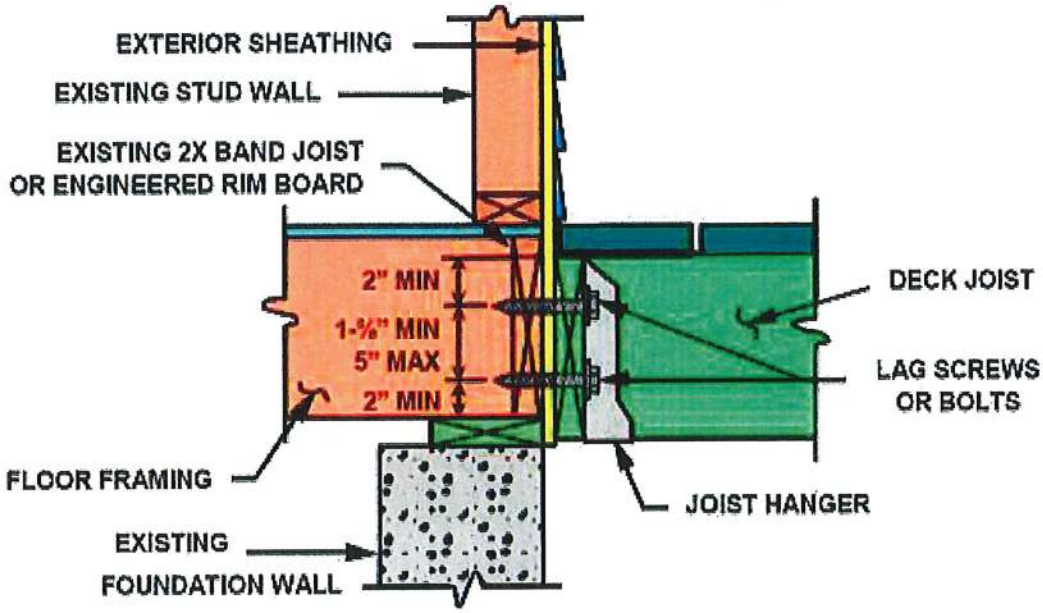

½" DIAMETER LAG SCREWS MINIMUM

Lag screws must be hot-dipped galvanized or stainless steel only

LEDGER FLASHING DETAIL

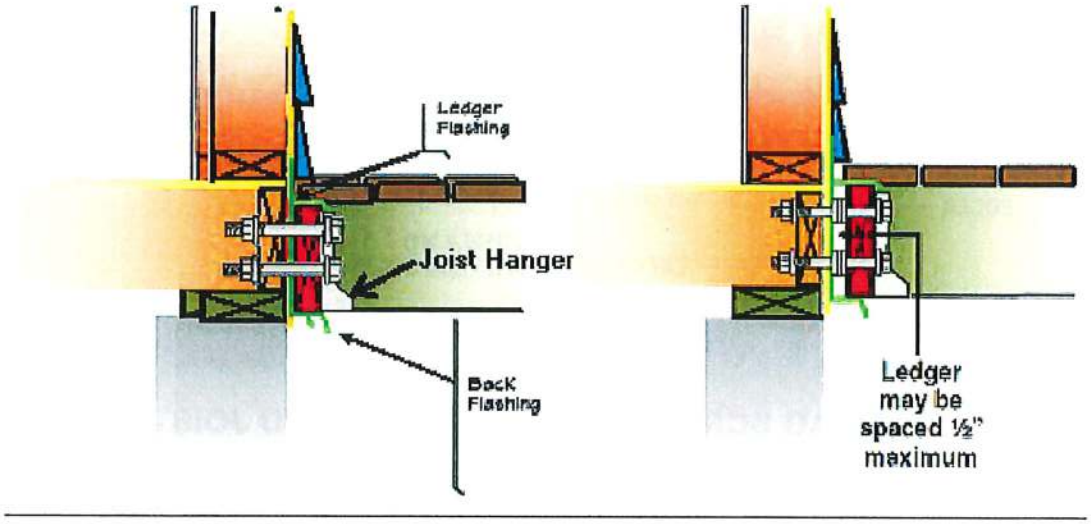

LATERAL LOAD CONNECTIONS TWO MINIMUM PER DECK

(See "Alternate Methods" page 10)

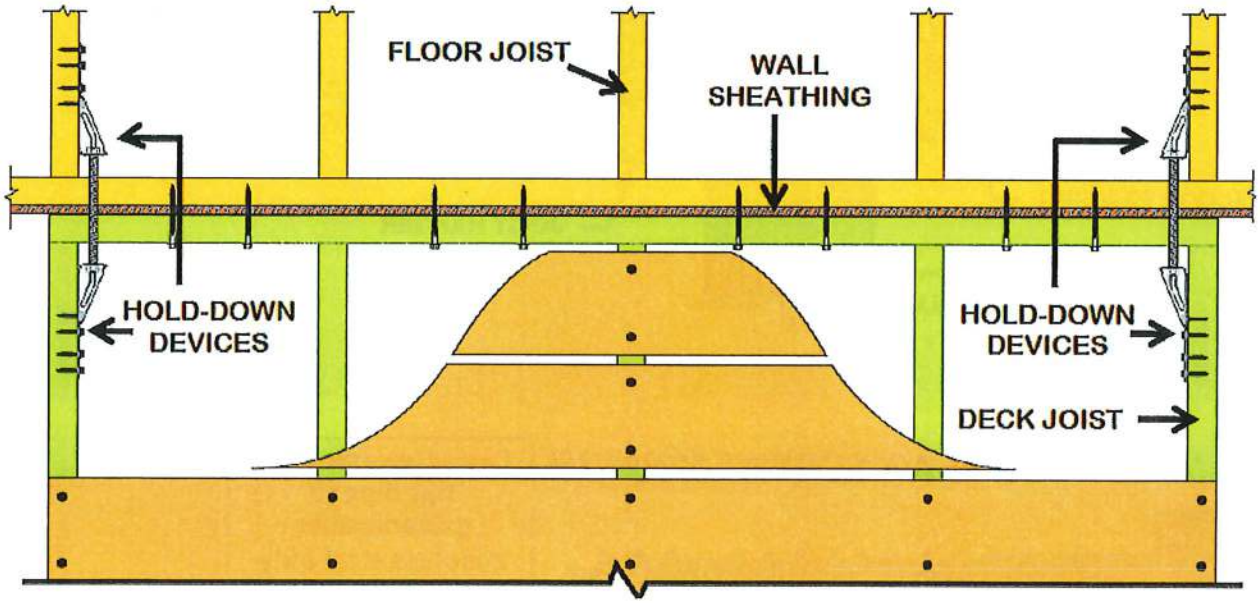

- HOLD-DOWN TENSION DEVICES MUST BE INSTALLED IN NOT LESS THAN TWO LOCATIONS PER DECK
- EACH DEVICE MUST HAVE AN ALLOWABLE STRESS DESIGN CAPACITY OF NOT LESS THAN 1500 POUNDS.
- FLOOR SHEATHING IN THE DWELLING MUST BE NAILED TO THE JOISTS TO WHICH HOLD DOWNS ARE CONNECTED AT 6" MAXIMUM O.C.
- ALTERNATIVELY THE DECK MAY BE DESIGNED TO BE SELF SUPPORTING OR A DESIGN MAY BE PROVIDED BY A LICENSED DESIGN PROFESSIONAL.

FLOOR JOISTS PERPENDICULAR TO DECK LEDGER

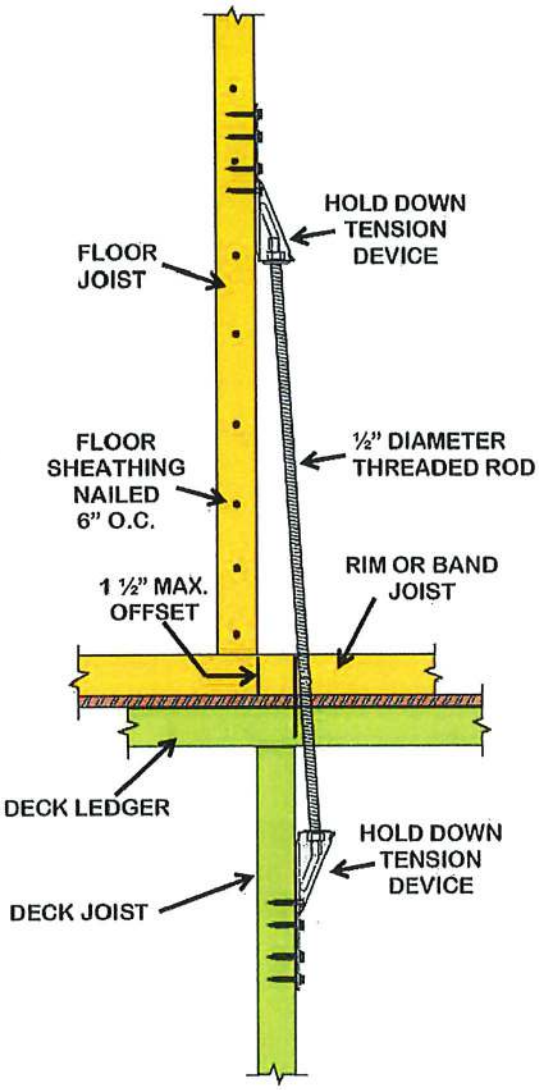

FLOOR JOISTS PARALLEL TO DECK LEDGER

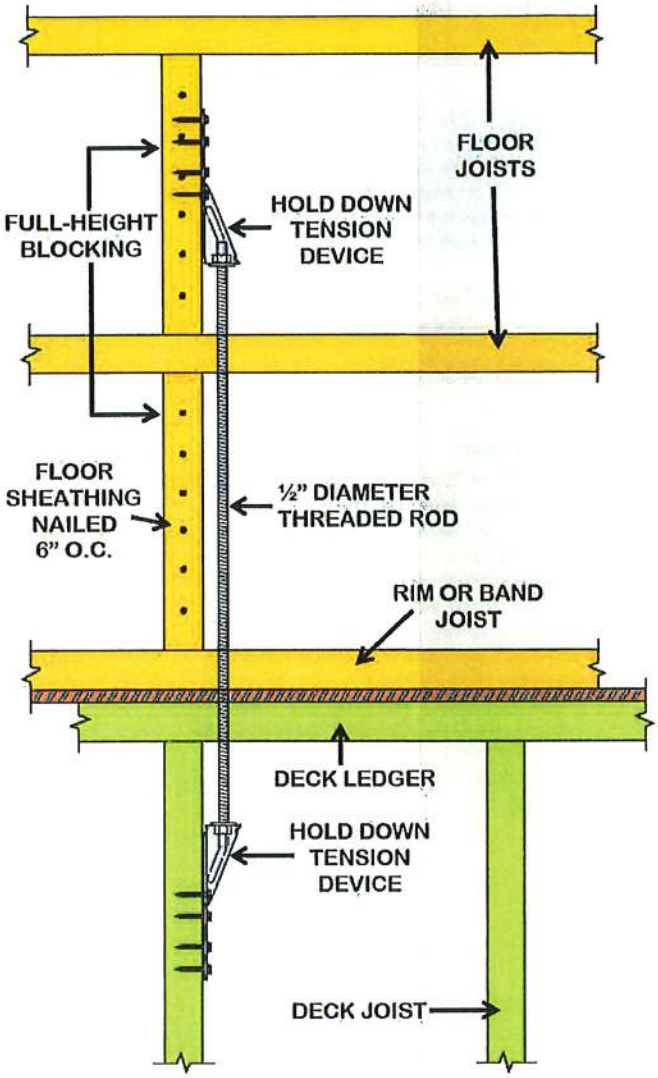

WHEN THERE IS NO ACCESS TO THE TOP OF THE FLOOR SHEATHING

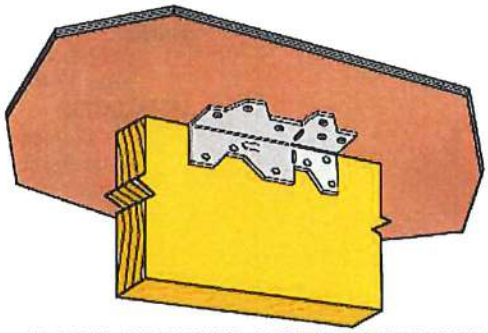

INSTALL APPROVED CONNECTORS PER THE MANUFACTURER'S INSTALLATION INSTRUCTIONS

IN ALL CASES, MANUFACTURER'S INSTALLATION INSTRUCTIONS MUST BE FOLLOWED

ALTERNATIVE DECK LATERAL LOAD CONNECTORS (or approved equivalent)

USP STRUCTURAL CONNECTORS MiTek

LTS19-TZ
Deck Lateral Load Connector

The LTS19-TZ holdown can be used to build stronger, safer, deck structures. It will meet the new lateral connection requirements outlined in the 2015 International Residential Code (IRC) by attaching deck floor joist members to the main structure. The LTS19-TZ can also be used for deck rail post reinforcement.

Materials: Strap: 16Ga G-185 galvanizing
Washer - 3Ga USP primer

Codes: ER-200, FL14500

Installation:

- The LTS19-TZ must be installed flush to the surface of the outside wall of the home.
- Use the building code specified 3/8" lag screw and washer to secure the base of the LTS19-TZ to the main house structure. The minimum embedment depth for the lag screw is 3".
- Tighten lag screw until snug to the base of the LTS19-TZ, with a wrench or socket, to prevent loosening of the lag screw.
- Use all specified 10d common nails to attach the strap portion of the connector to the bottom of the deck floor joist.
- See additional installation instructions on detail drawing.

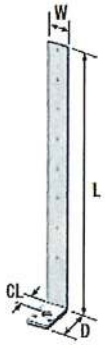

LTS19-TZ

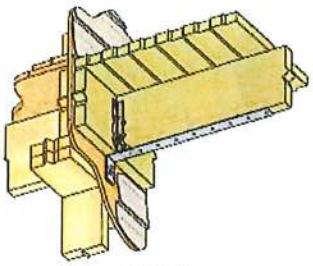
LTS19-TZ Application

SIMPSON Strong-Tie

Decks & Fences

DTT *Deck Tension Ties*

DTT tension ties are safe, cost-effective connectors designed to meet or exceed code requirements for deck construction. These versatile DTT connectors are also load rated as a holdown for light-duty shearwalls and braced wall panel applications.

For new construction or to make an existing current deck code-compliant, the DTT1Z can be used as a tension-tie to satisfy the 2015 IRC provision for a 750 lbs. lateral load connection to the house at four locations per deck. This new code detail permits the lateral connection from the deck joists to be made to top plates, studs, or headers within the supporting structure, which eliminates the need to access to the floor joists inside the home.

The new DTT1Z fastens to the narrow or wide face of a single 2x with Simpson Strong-Tie® Strong-Drive® SD Connector screws or nails and accepts a ⅜" machine bolt, anchor bolt, or lag screw *(washer required)* or can be installed with the new Strong-Drive SDWH Timber-Hex HDG screw with an integral washer. The DTT2 fastens easily to the wide face of a single or double 2x using Simpson Strong-Tie Strong-Drive SDS Heavy-Duty Connector screws (included) and accepts a ½" machine bolt or anchor bolt.

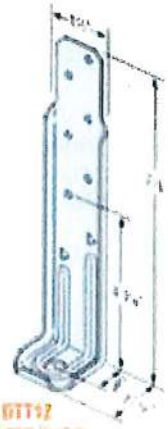
DTT1Z

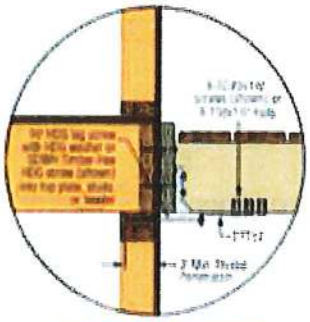
Typical DTT1Z Deck to Floor Lateral Load Connection

MATERIAL: 14 gauge
FINISH: DTT1Z/DTT2Z—ZMAX® coating;
DTT2SS—Stainless steel; see Corrosion Information, pages 13-15.
INSTALLATION:

- Use all specified fasteners. See General Notes.
- A standard cut washer *(included)* must be installed between the nut and the seat.
- Simpson Strong-Tie Strong-Drive SDS Heavy-Duty Connector screws install best with a low speed high torque drill with a ⅜" hex head driver.
- Strong-Drive SD Connector screws install with a ¼" hex head driver.
- Strong-Drive SDWH Timber-Hex HDG screws install with a ½" hex head driver.

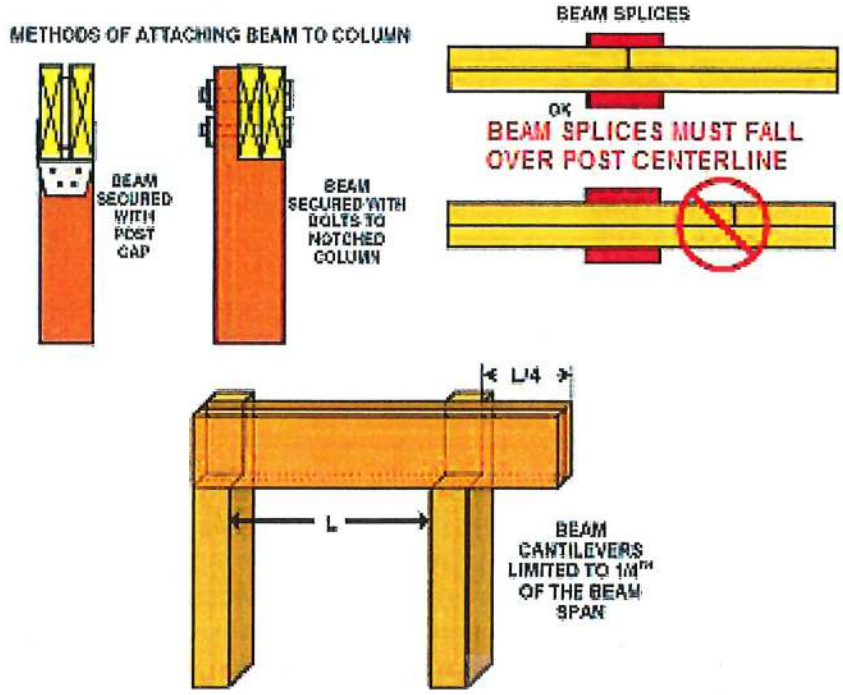

TABLE R507.4
DECK POST HEIGHT[a]

DECK POST SIZE	MAXIMUM HEIGHT[a,b] (feet-inches)
4 × 4	6-9[c]
4 × 6	8
6 × 6	14
8 × 8	14

For SI: 1 inch = 25.4 mm, 1 foot = 304.8 mm, 1 pound per square foot = 0.0479 kPa.

a. Measured to the underside of the beam.

b. Based on 40 psf live load.

c. The maximum permitted height is 8 feet for one-ply and two-ply beams. The maximum permitted height for three-ply beams on post cap is 6 feet 9 inches.

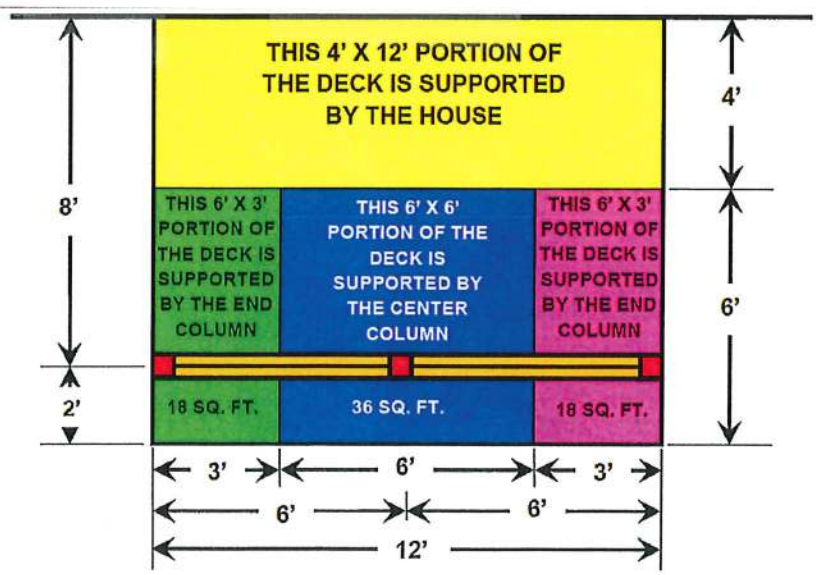

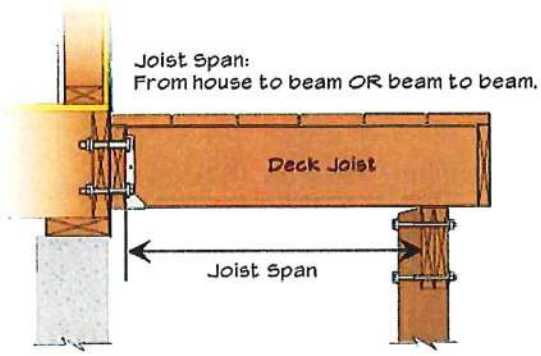

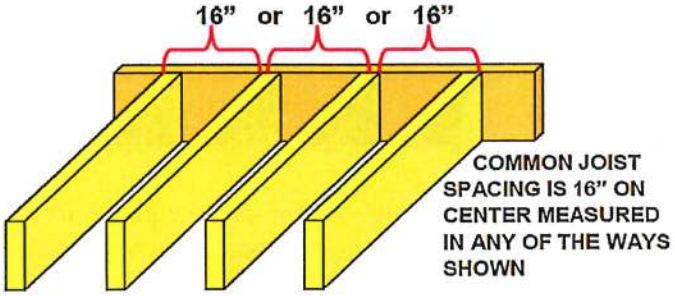

Joist spacing is determined by the type of decking used. 16" o.c. spacing must be used with 5/4 decking or when 2x6 or 2x4 decking is used at a 45° angle. 12" o.c. spacing required when 5/4 decking is used at a 45° angle.

WOOD DECKING

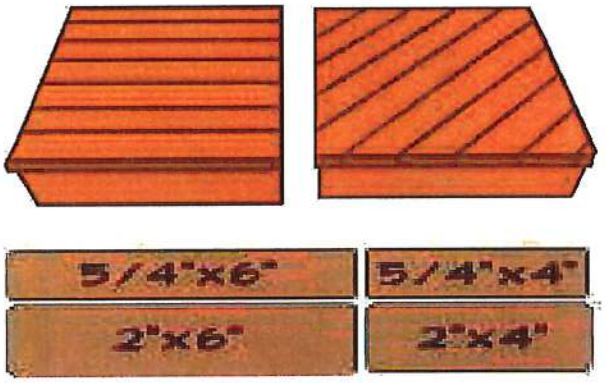

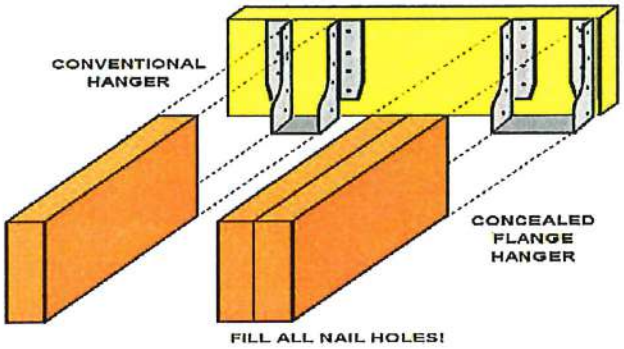

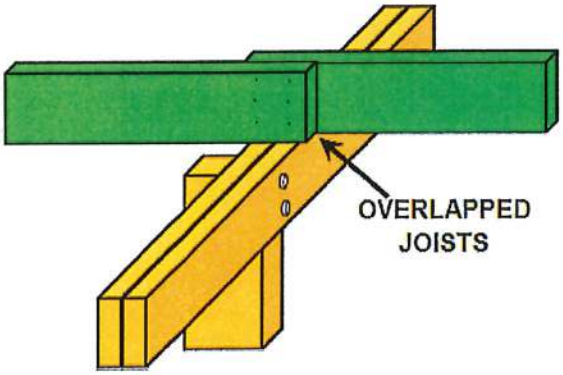

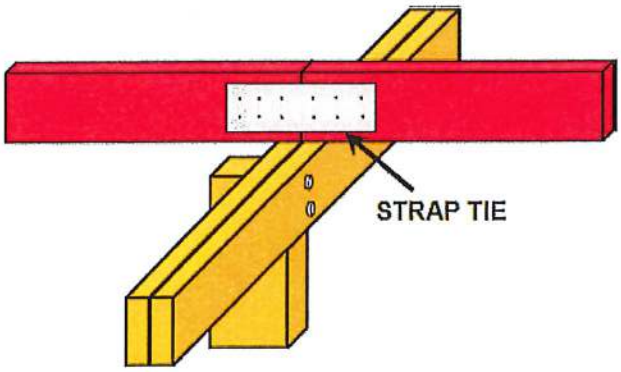

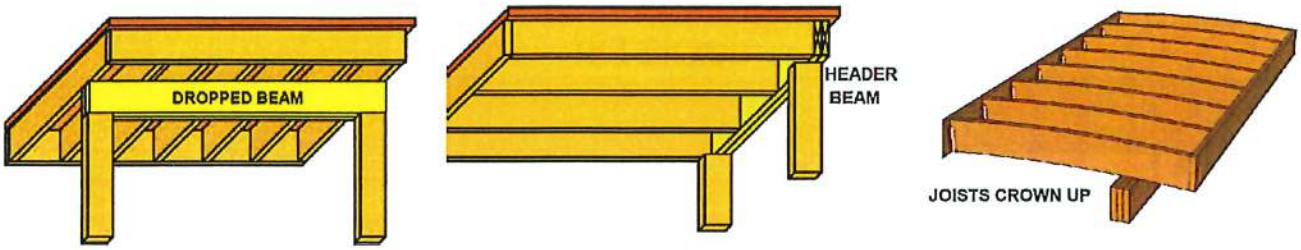

JOIST TO BEAM ATTACHMENTS

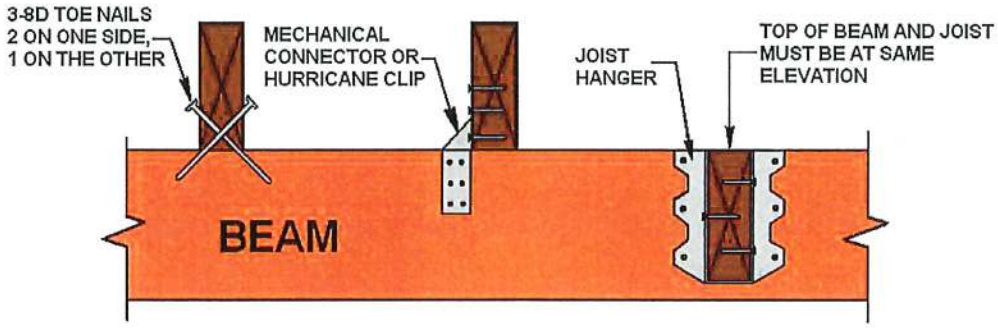

Joists must bear on a beam, ledger strip, or joist hangers. Joist hangers must be installed in accordance with the manufacturer's recommendations. ***Fill all nail holes in joist hangers.***

RIM JOIST ATTACHED TO LEDGER WITH CONCEALED FLANGE HANGER

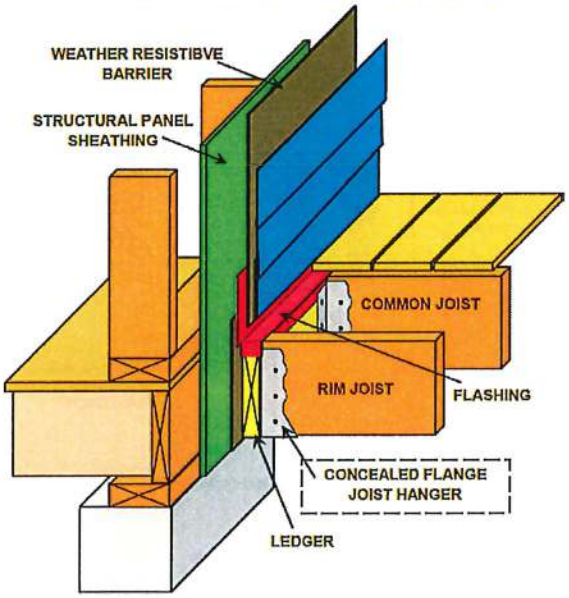

RIM JOIST ATTACHED TO LEDGER BY END NAILING - NOT ALLOWED

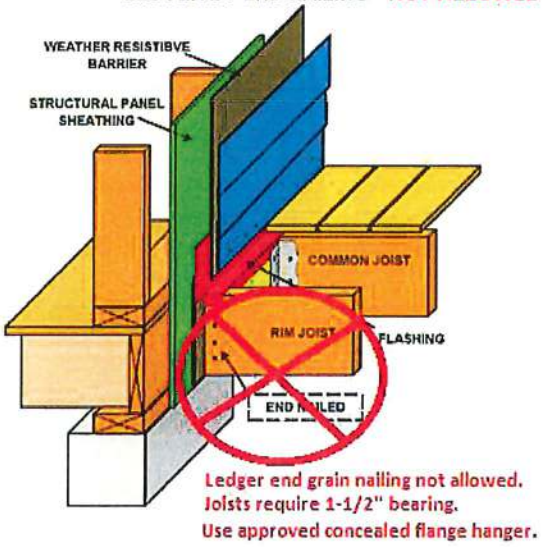

CANTILEVERS

THE AMOUNT OF CANTILEVER IS LIMITED BY THE SIZE AND SPACING OF THE JOIST AND THE LENGTH OF THE BACKSPAN

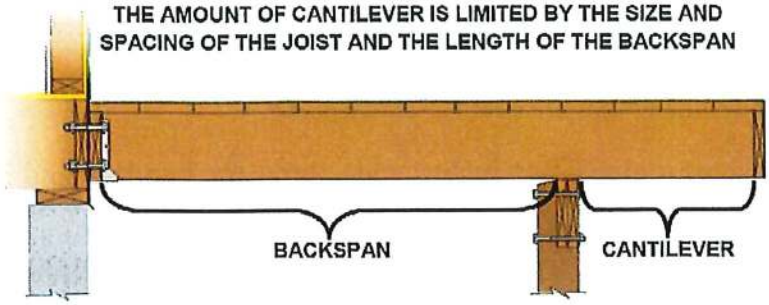

SPECIAL FLOORFRAMINGDETAILS

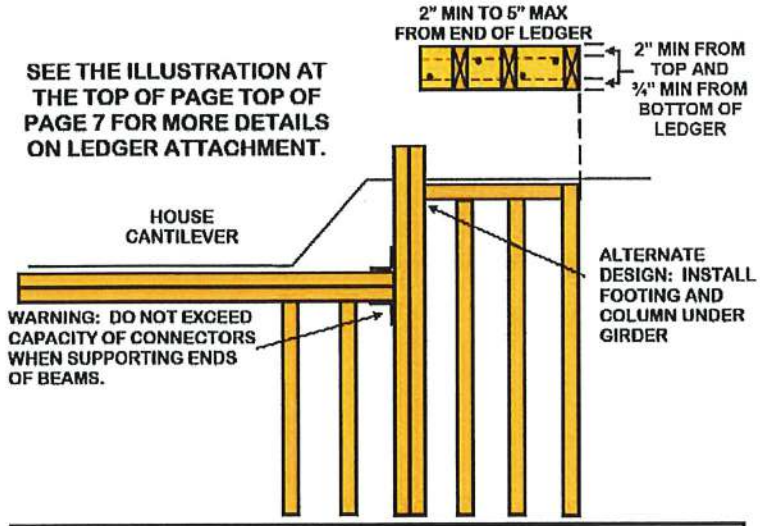

WARNING: CAPACITY OF LAG OR CARRIAGE BOLTS SHALL NOT EXCEED 400 LB'S PER BOLT UNLESS DESIGN PROVIDED.

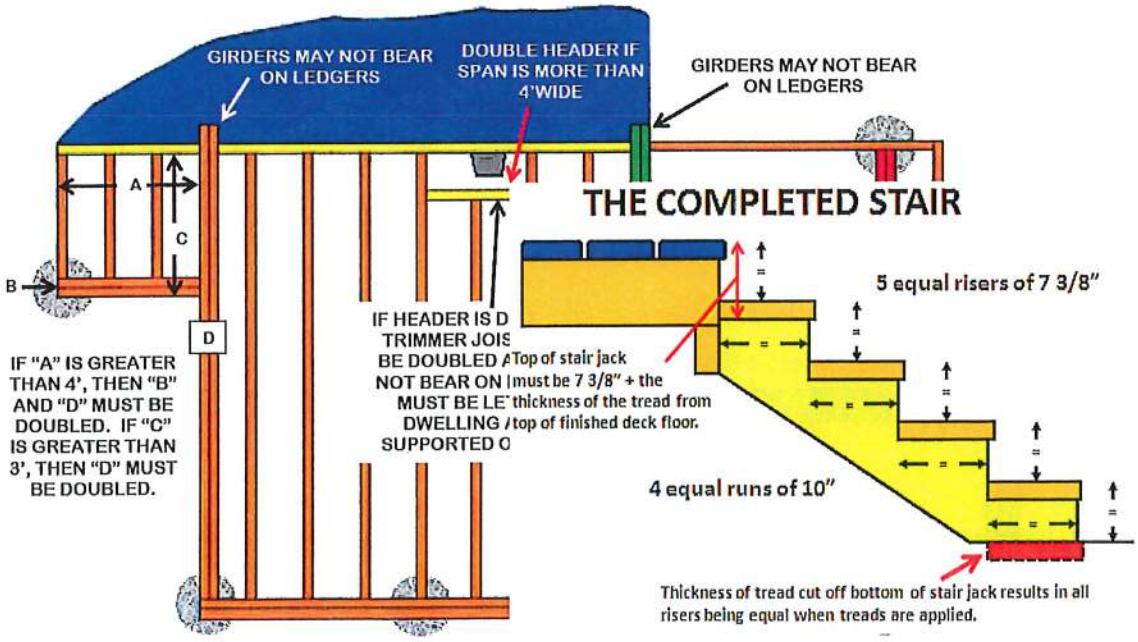

Stairs must have a maximum rise of 7 3/4 inches and a minimum run of 10 inches measured as shown. The greatest riser height within any flight of stairs shall not exceed the smallest by more than ⅜ inch. The greatest tread depth within any flight of stairs shall not exceed the smallest by more than ⅜ inch. **Open risers are permitted provided that a 4" diameter sphere will not pass between the treads when stairs are over 30" above grade.**

Stairs must be a minimum of 36 inches wide above the handrail and 31½ inches below the handrail.

STAIR TERMINOLOGY

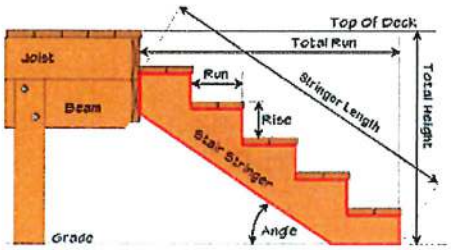

Stair Basics

- The maximum riser height is 7 ¾ inches
- The minimum tread run is 10 inches
- Treads and risers should be approximately equal with the largest not exceeding the smallest by more than ⅜ inch.

DETERMINING RISE/RUN

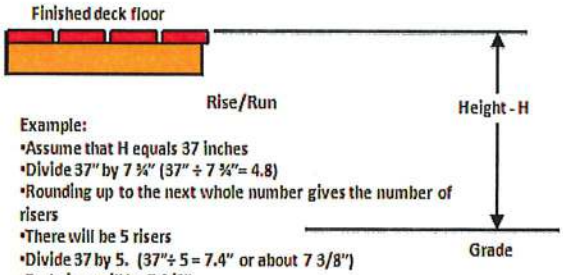

Example:

- Assume that H equals 37 inches
- Divide 37" by 7 ¾" (37" ÷ 7 ¾"= 4.8)
- Rounding up to the next whole number gives the number of risers
- There will be 5 risers
- Divide 37 by 5. (37"÷ 5 = 7.4" or about 7 3/8")
- Each riser will be 7 3/8"
- For 5 risers there will be 4 treads
- Since each tread must be at least 10", the length of the stair from the face of the deck to the face of the bottom riser will be at least 40" (10" X 4 treads = 40")

LAYING OUT STAIR JACKS

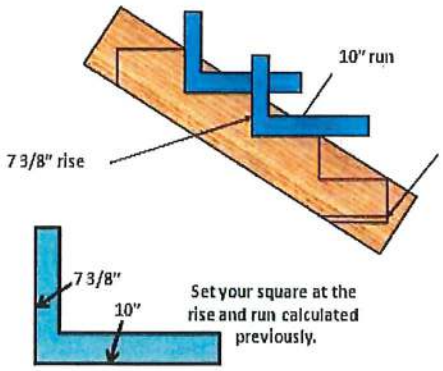

Set your square at the rise and run calculated previously.

Cut an amount equal to the thickness of the tread from the bottom of the stair jack

THE COMPLETED STAIR

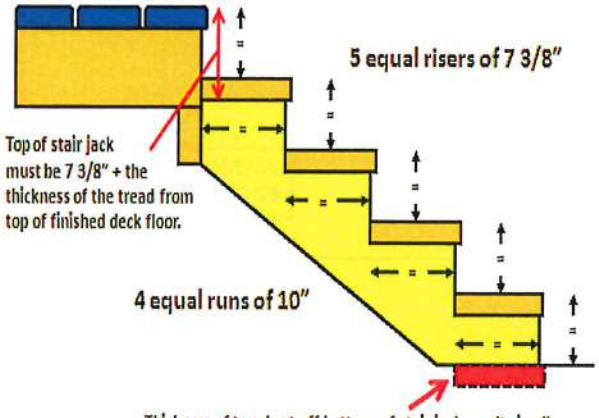

Thickness of tread cut off bottom of stair jack results in all risers being equal when treads are applied.

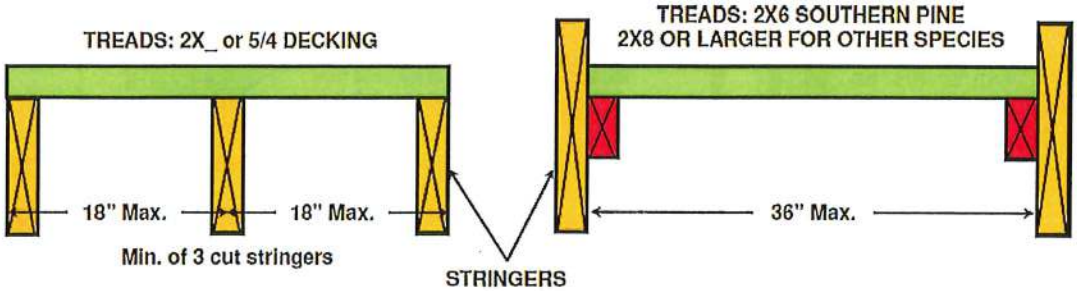

STAIR STRINGER SPANS

LANDINGS OR COLUMNS AND BEAMS MAY BE USED TO SHORTEN STRINGER SPANS

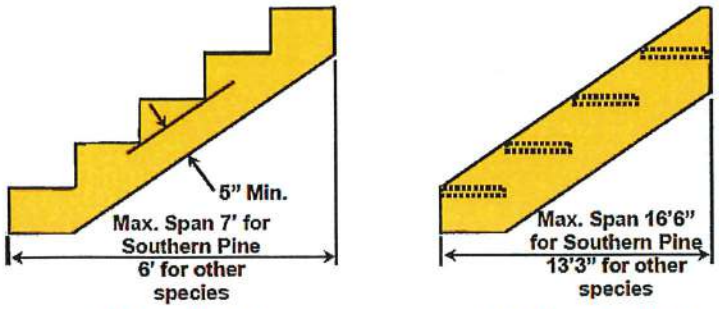

CUT STRINGER **SOLID STRINGER**

STAIR ATTACHMENTS

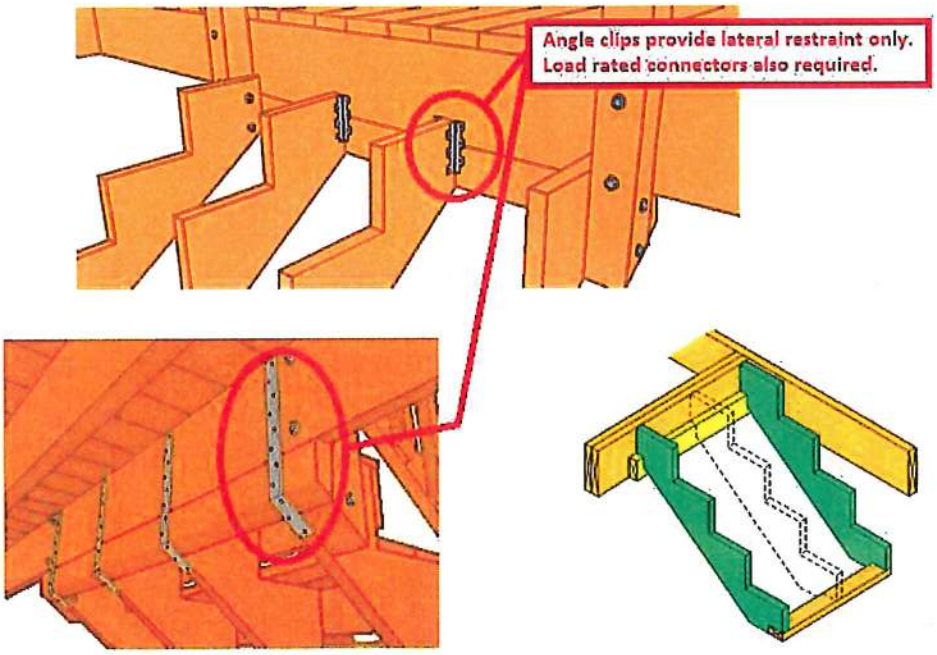

GUARDS AND HANDRAILS

Guards and handrails must be provided as shown on the following illustrations. Guards must continue down stairs where the stair is more than 30 inches above grade. The height of guards on stairs must be 34inches minimum.

Handrails must be provided on at least one side when there are four or more risers. Handrails must have returns on each end or terminate in a newel post. Other handrail shapes having an equivalent gripping shape may be used with prior approval of the Building Department.

Handrails must be continuous for the entire length of the stairs and may not be interrupted by newel posts except at landings.

Handrails and guards must be designed to support a 200lb load applied in any direction at any point along the top of the guard or rail.

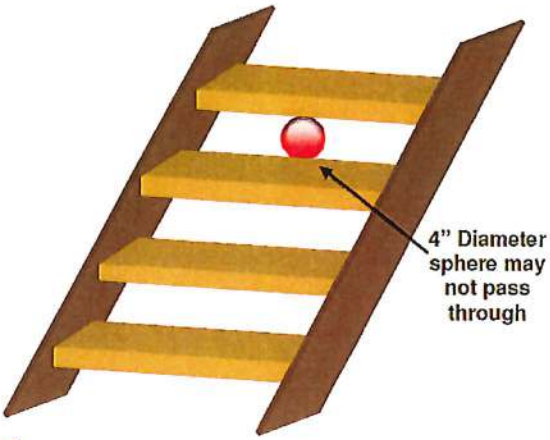

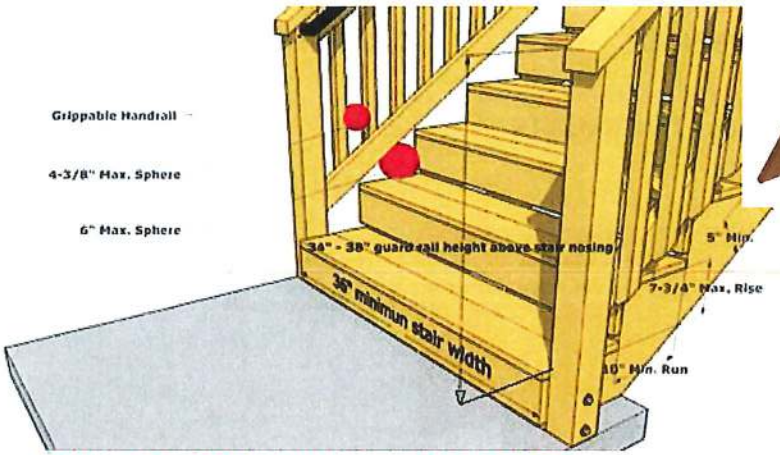

LANDING SHALL SPAN FULL WIDTH OF STAIRS & EXTEND A MINIMUM OF 36 INCHES IN THE DIRECTION OF TRAVEL.

STAIRS MUST BEAR ON STRUCTURAL MATERIAL (i.e. treated lumber, concrete, gravel) AND BE PERMANENTLY RESTRAINED FROM LATERAL MOVEMENT.

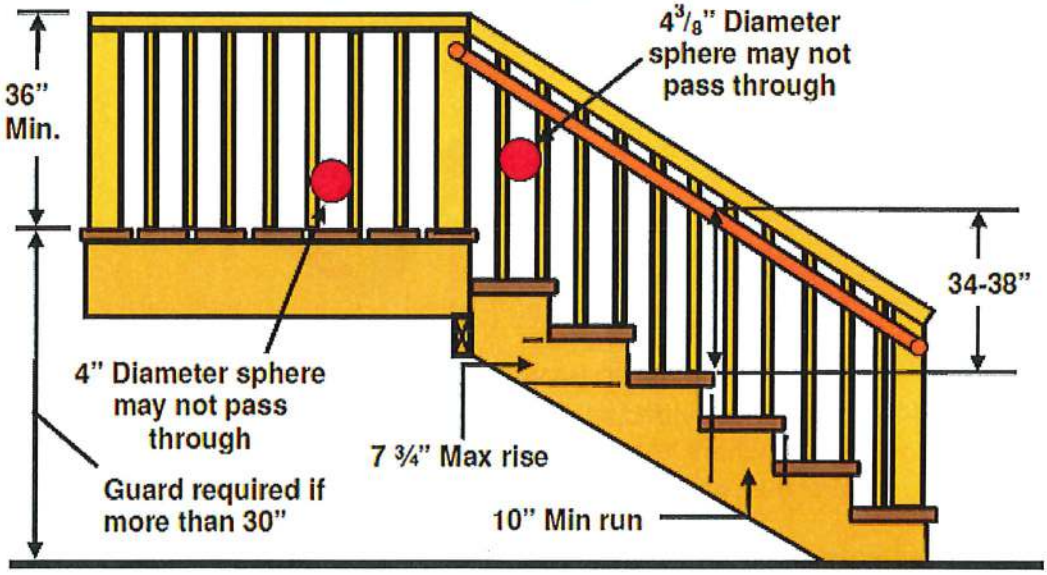

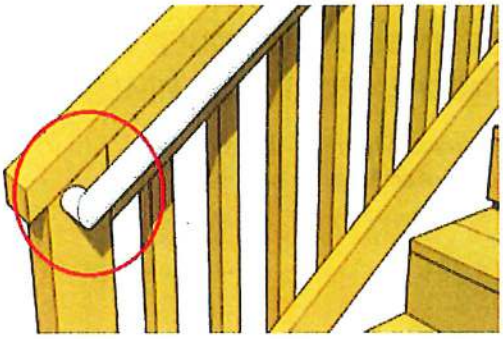

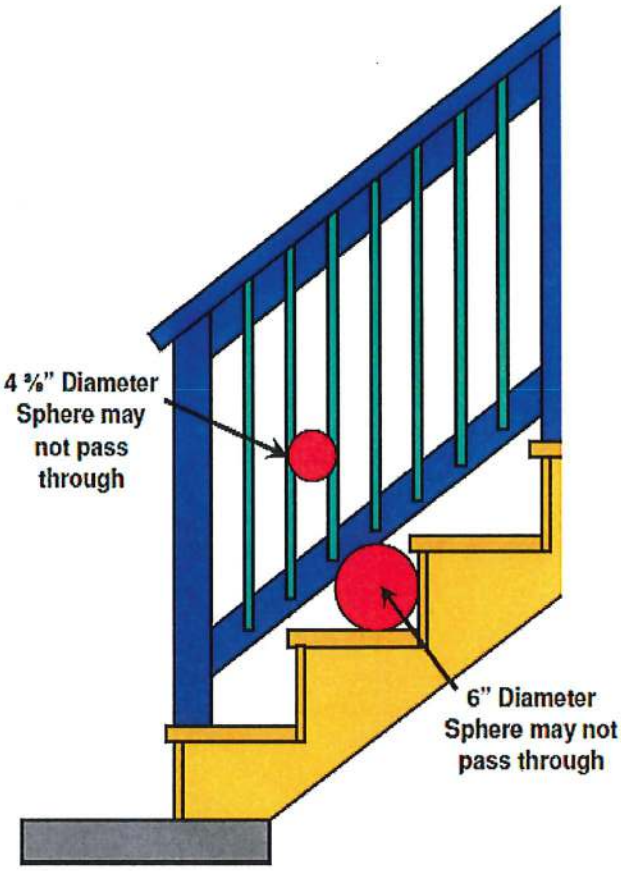

HANDRAILS MUST RETURN TO NEWEL POST AND BE CONTINUOUS WITHOUT INTERUPTION FOR THE LENGTH OF THE FLIGHT INTERUPTION FOR THE LENGTH OF THE FLIGHT

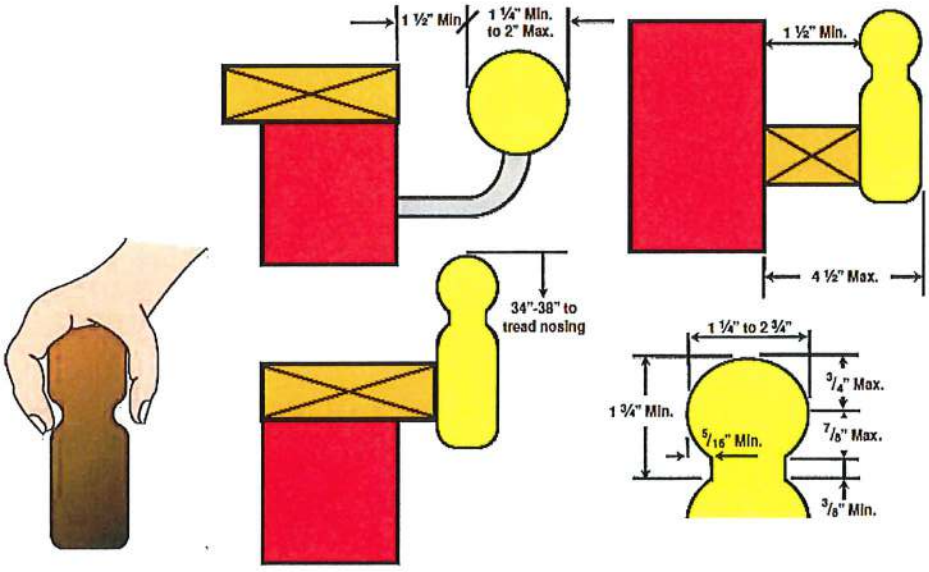

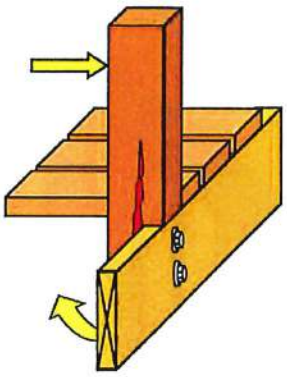

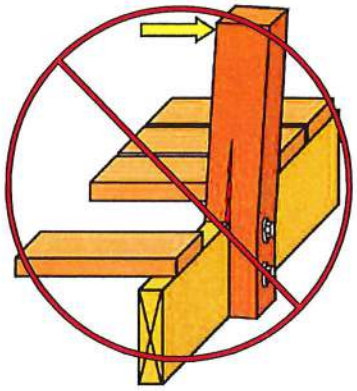

AVOID NOTCHING GUARD POSTS

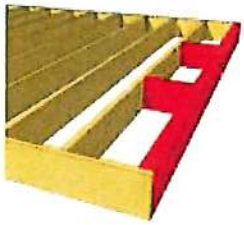

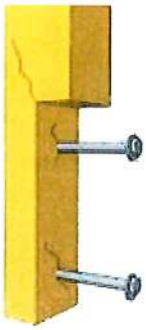

BLOCKING MAY BE ADDED TO STRENGTHEN POST ATTACHMENT

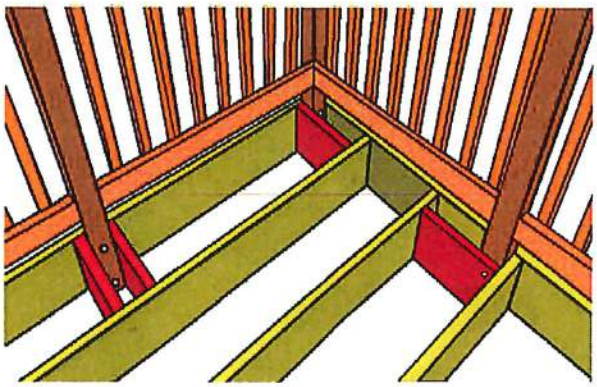

Examples of Devices that can be used to resist horizontal loads

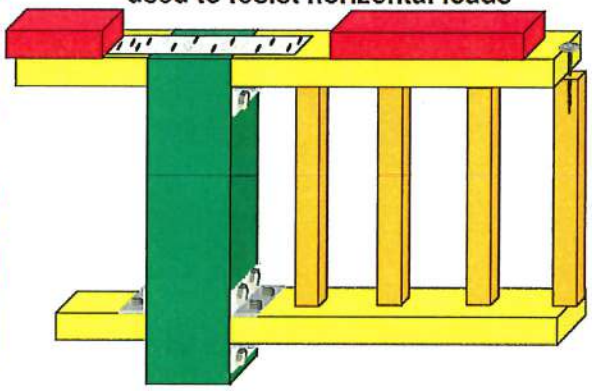

COMPOSITES AND OTHER DECK/RAILING PRODUCTS

Wood/plasticcomposites used for exterior deckboards, stair treads, handrailsand guardrail systems must bear labels indicating compliance with ASTM D 7031 or a current ICC Evaluation Services Report mustbe madeavailable.

Wood/plastic composites complyingwith ASTM D 7031 must be installed in accordance with the manufacturer'swritten installation instructions.

Wood/plastic composites having an ICC ES Report must be installed in accordance with the manufacturer'sinstallationinstructionsandthe report.

READ THEINSTRUCTIONS AND THEREPORTS CAREFULLY. ALLPRODUCTS HAVE SPECIFIC REQUIREMENTS FOR STAIR TREADS. SOME ARE LIMITED TOINSTALLATION PERPENDICULAR TO JOISTSONLY.

PRODUCTS MADE OF ALUMINUM, STEEL, GLASS, OR ANY OTHER MAN MADE PRODUCT MAY BEUSED IF THE MANUFACTURER HAS ARESEARCHREPORT FROM THE INTERNATIONAL CODE COUNCIL ANDTHE PRODUCT IS INSTALLED IN STRICT ACCORDANCEWITH THAT REPORT ORSITE SPECIFIC ENGINEERING ISPROVIDED.